Vacuum lifting traverses – standard

Features

- Long service life through use of high-quality materials
- Either electric or pneumatic vacuum pump
- Number of suction cups is based on sheet metal thickness
- Acoustic safety warning system, incl. rechargeable battery
- Ball valves for shutting off individual suction cups – factory standard

LIFTING

SERIES VHTS

Vacuum lifting traverses – standard

ALSO AVIALBALBE WITH RECHARGE-ABLE BATTERY (SEE PAGE 43)

LIFTING

Suction base incl. spring plunger and clamp unit

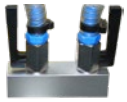

Ball valves, each suction cup can be shut-off individually

Cross-clamp piece for variable adjustment possibilities

Basic module control cabinet

Electric or pneumatic vacuum generator

Manual slide valve with safety locking mechanism

Parking pads with locking (optional)

Holder for crane control system (optional)

Application

The traverses, which are structured based on a modular concept, offer unique flexibility thanks to their freely adjustable slide system.
Thanks to the crossbeams and suction cups, which are likewise freely adjustable, tim®LIFT-Lifting traverses are optimally suited for your handling tasks.

These systems are used for handling vacuum-tight wood panels, plastic panels, as well as steel and aluminium sheets in small, medium and large formats. Thanks to the small dimensions and the durable design, these lifting traverses offer a lot of comfort at a good price.

Other features

- Long service life through use of high-quality materials
- Either electric or pneumatic vacuum pump
- Acoustic safety warning system, incl. rechargeable battery (function is also ensured in the event of a power failure)
- Operation: Suctioning and releasing by means of a manual slide valve with safety locking mechanism
- Vacuum meter, vacuum tank with check valve
- Ball valves for shutting off individual suction cups – factory standard
- Cross clamp pieces for variable adjustment possibilities

HIGHER LOAD CA-PACITIES ON REQUEST!

Technical and visual modifications are reserved.

Vacuum lifting traverses – standard

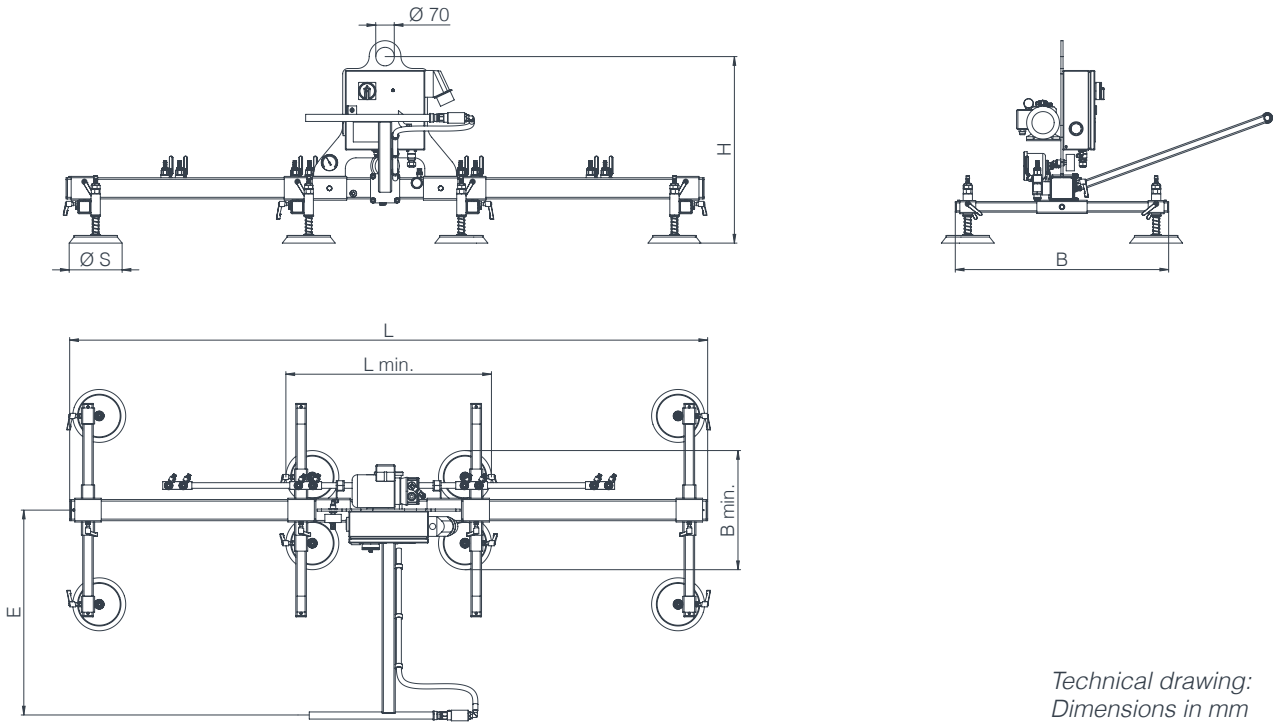

Technical drawing:
Dimensions in mm

Order no.	Type	Tare weight kg approx.	Number of suction cups	Ø Suction cups	Vacuum pump	System dimensions L	B	E	H	Sheet metal dimensions min. l / w / d	max. l / w
Lifting up to 150 kg											
61102031	TA-VHTS2-150/2500x1250-P-X-SF150x4	52	4	150	Pneumatic	1810	800	765	685	780 x 380 x 3	2500 x 1250
61102030	TA-VHTS2-150/2500x1250-E-X-SF150x4	60	4	150	Electric	1810	800	765	685	780 x 380 x 3	2500 x 1250
Lifting up to 300 kg											
61102012	TA-VHTS2-300/2500x1250-P-X-SF200x4	80	4	200	Pneumatic	1910	800	765	685	800 x 480 x 3	2500 x 1250
61102000	TA-VHTS2-300/2500x1250-E-X-SF200x4	65	4	200	Electric	1910	800	765	685	800 x 480 x 3	2500 x 1250
61102013	TA-VHTS2-300/3000x1500-P-X-SF150x8	73	8	150	Pneumatic	2410	800	765	685	700 x 380 x 1	3000 x 1500
61102001	TA-VHTS2-300/3000x1500-E-X-SF150x8	85	8	150	Electric	2410	800	765	685	700 x 380 x 1	3000 x 1500
Lifting up to 500 kg											
61102014	TA-VHTS2-500/3000x1500-P-X-SF240x4	75	4	240	Pneumatic	2010	800	765	705	850 x 540 x 3	3000 x 1500
61102002	TA-VHTS2-500/3000x1500-E-X-SF240x4	80	4	240	Electric	2010	800	765	705	850 x 540 x 3	3000 x 1500
61102015	TA-VHTS2-500/3000x1500-P-X-SF200x8	95	8	200	Pneumatic	2410	800	765	705	810 x 500 x 1	3000 x 1500
61102003	TA-VHTS2-500/3000x1500-E-X-SF200x8	105	8	200	Electric	2410	800	765	705	810 x 500 x 1	3000 x 1500
Lifting up to 750 kg											
61102016	TA-VHTS2-750/3000x1500-P-X-SF285x4	100	4	285	Pneumatic	2410	800	1000	745	900 x 740 x 3	3000 x 1500
61102004	TA-VHTS2-750/3000x1500-E-X-SF285x4	120	4	285	Electric	2410	800	1000	745	900 x 740 x 3	3000 x 1500
61102017	TA-VHTS2-750/3000x1500-P-X-SF200x8	125	8	200	Pneumatic	2410	800	1000	745	820 x 660 x 1	3000 x 1500
61102005	TA-VHTS2-750/3000x1500-E-X-SF200x8	150	8	200	Electric	2410	800	1000	745	820 x 660 x 1	3000 x 1500
Lifting up to 1000 kg											
61102019	TA-VHTS2-1000/4000x2000-P-X-SF240x8	165	8	240	Pneumatic	3410	1300	1000	745	860 x 700 x 1	4000 x 2000
61102007	TA-VHTS2-1000/4000x2000-E-X-SF240x8	170	8	240	Electric	3410	1300	1000	745	860 x 700 x 1	4000 x 2000
Lifting up to 1500 kg											
61101020	TA-VHTS-1500/6000x2000-P-X-SF285x8	285	8	285	Pneumatic	5410	1300	1000	845	1350 x 700 x 4	6000 x 2000
61101008	TA-VHTS-1500/6000x2000-E-X-SF285x8	310	8	285	Electric	5410	1300	1000	845	1350 x 700 x 4	6000 x 2000
61101021	TA-VHTS-1500/6000x2000-P-X-SF240x12	310	12	240	Pneumatic	5410	1300	1000	845	1300 x 650 x 1	6000 x 2000
61101009	TA-VHTS-1500/6000x2000-E-X-SF240x12	335	12	240	Electric	5410	1300	1000	845	1300 x 650 x 1	6000 x 2000
Lifting up to 2000 kg											
61101022	TA-VHTS-2000/6000x2000-P-X-SF285x12	330	12	285	Pneumatic	5410	1300	1000	845	1350 x 700 x 4	6000 x 2000
61101010	TA-VHTS-2000/6000x2000-E-X-SF285x12	355	12	285	Electric	5410	1300	1000	845	1350 x 700 x 4	6000 x 2000
61101023	TA-VHTS-2000/6000x2000-P-X-SF240x16	350	16	240	Pneumatic	5410	1300	1000	845	1300 x 650 x 1	6000 x 2000
61101011	TA-VHTS-2000/6000x2000-E-X-SF240x16	375	16	240	Electric	5410	1300	1000	845	1300 x 650 x 1	6000 x 2000

For the "min." distances the outer ball valves must be closed!
Please note that the permissible load capacity decreases with a lower number of suction cups!

Vacuum lifting traverses – standard

TA-VHTS2-150/2500x1250-E-X-SF150x4

For transport of vacuum-tight material:

Length	:	Up to 2,500 mm
Load capacity	:	Up to 150 kg
Width	:	Up to 1,250 mm
Material thickness	:	From 3 mm

LIFTING

UP TO 150 kg

TA-VHTS-1500/6000x2000-E-X-SF240x12

For transport of vacuum-tight material:

Length	:	Up to 6,000 mm
Load capacity	:	Up to 1,500 kg
Width	:	Up to 2,000 mm
Material thickness	:	From 1 mm

LIFTING

UP TO 1.500 kg

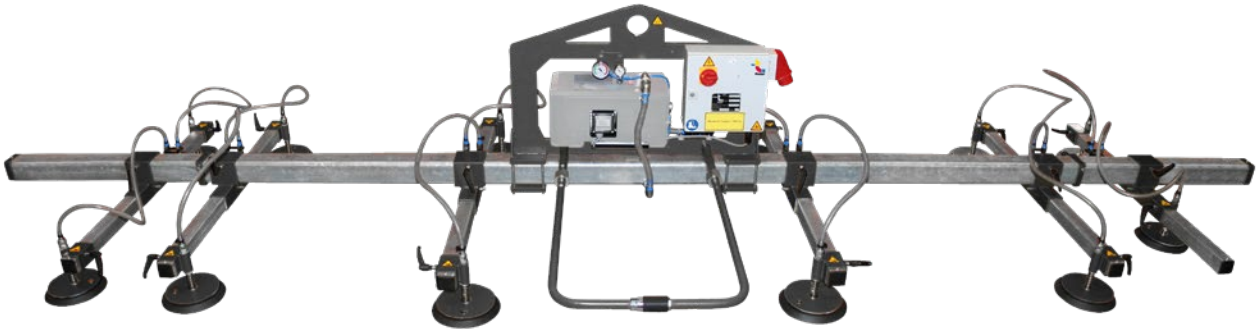

Technical and visual modifications are reserved.